M-6070 | 4

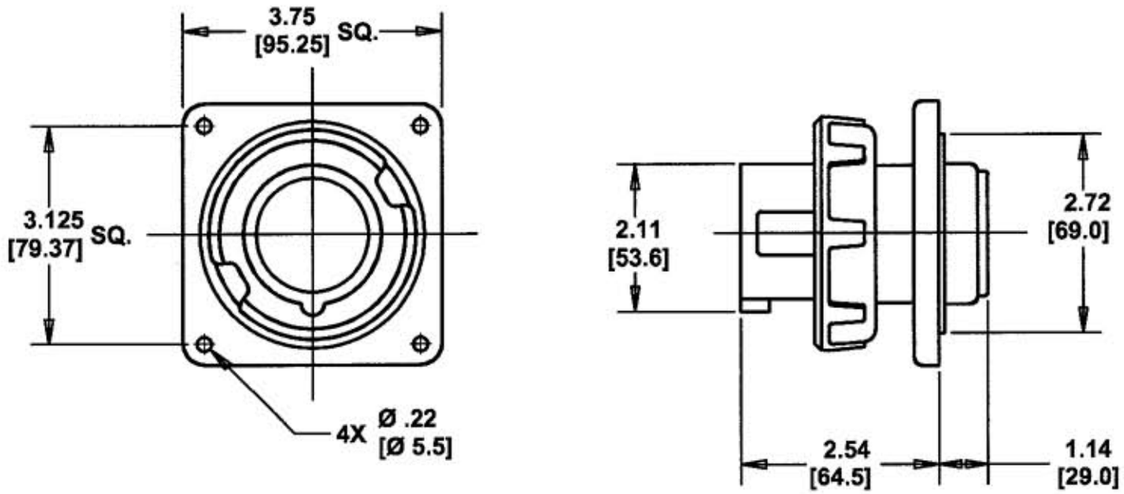

CAT. NO.	CONFIGURATION	RATING	COMMENTS	HOUSING MATERIAL	HOUSING COLOR	CAT. NO.	CONFIGURATION	RATING	COMMENTS	HOUSING MATERIAL	HOUSING COLOR
						HBL420B7W		20 A 3Ø 480 VAC		NYLON	RED
						HBL420B9W		20 A 3Ø 250 VAC		NYLON	BLUE
HBL420B5W		20 A 3Ø 600 VAC		NYLON	BLACK						
HBL416B6W		16 A 380-415VAC		NYLON	RED	HBL420B12W		20 A 125/250 VAC		NYLON	ORANGE

NOTES (UNLESS OTHERWISE SPECIFIED)
1) TOLERANCES ARE:
DECIMALS ± .03
ANGLES ± 2°
2) DIMENSIONS ARE: INCHES
[MILLIMETERS]

CODE 74545

LIST OF PARTS

DESCRIPTION	MATERIAL	FINISH
HOUSING	SEE TABLE	
GASKET	NEOPRENE	
LOCK RING	POLYESTER	
INTERIOR	THERMOSET	
PINS	BRASS	
TERMINAL SCREWS	ST. STEEL	
FLANGE	NYLON	
ASSEMBLY SCREWS	ST. STEEL	

SYM	REVISIONS	APP	DATE
4	REDRAWN ON CAD WITH CHANGES. ADDED NOTES 1 & 2, "HOUSING" AND "COMMENTS" COLUMNS TO TABLE . IN TABLE, "A" WAS "AMP" AND "380-415VAC" WAS "380VAC". "Ø" WAS "DIA." AND "[XX.X]" WAS "MM". IN LIST OF PARTS, "SEE TABLE" WAS "NYLON" AND "NEOPRENE" WAS "RUBBER" .22 DIM. WAS 7/32. SUPERSEDES DWG. DATED 5/2/80 PER DCN #12944. JMN	DJP	6/23/06

THE DESIGN AND DIMENSIONS OF THE PRODUCT SHOWN ON THIS DRAWING ARE SUBJECT TO CHANGE WITHOUT NOTICE

TITLE
16A & 20A 3 POLE 4 WIRE PIN AND SLEEVE INLETS

TOLERANCES UNLESS OTHERWISE SPECIFIED
FRACTIONS ± 1/64
DECIMALS ± .005
ANGLES ± 2°

WIRING DEVICE–KELLEMS
HUBBELL INCORPORATED
BRIDGEPORT, CT

DR. BY	W.T.C.	APP. BY	DJP
TR. BY	JMN	SCALE	NONE
CHK'D BY	DJP	DATE	6/23/06

DIMENSION SHEET FOR CAT. NO. SEE TABLE

REPAIRABLE ☐ NON–REPAIRABLE ☒

B

M-6070

4